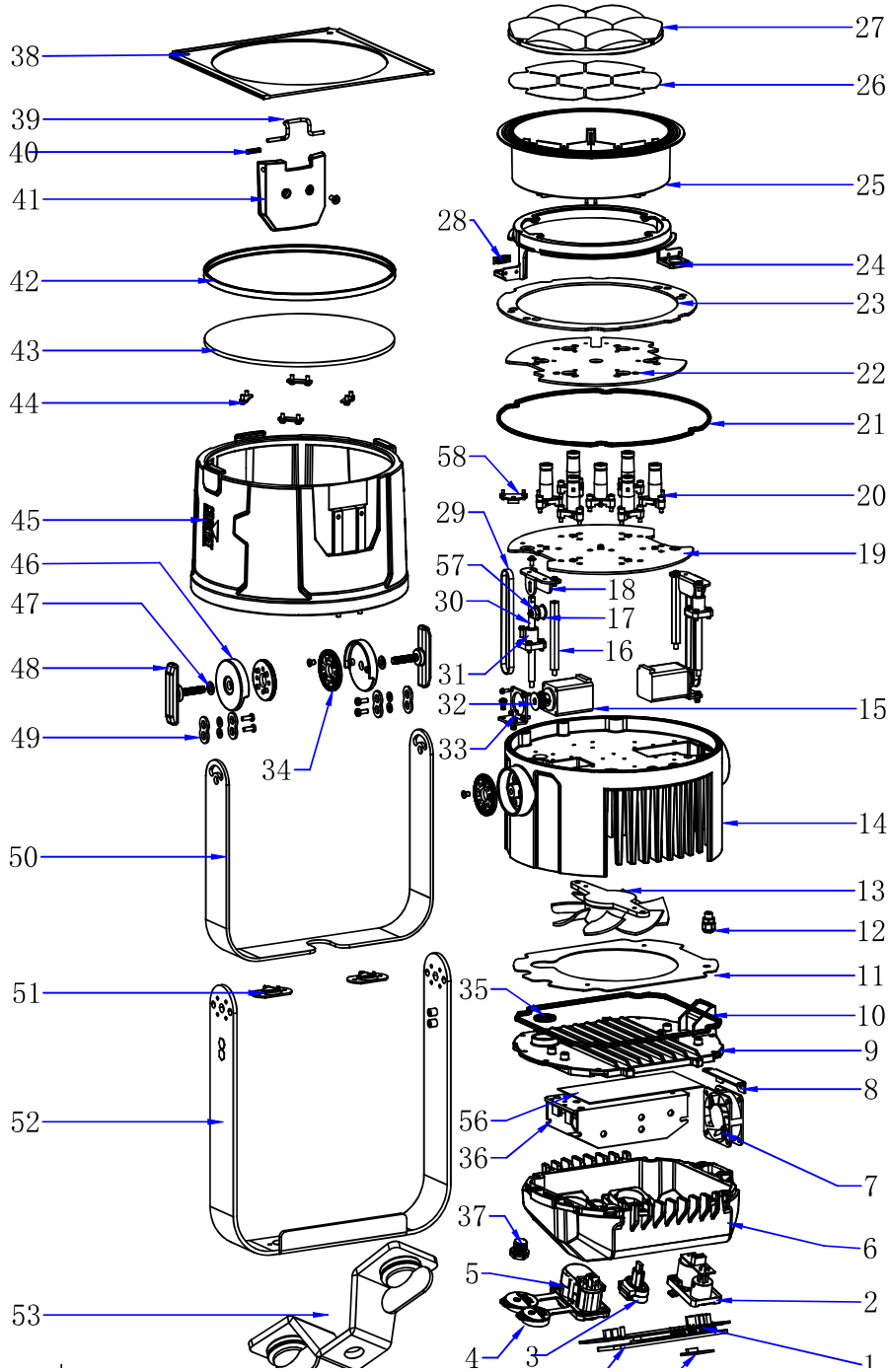
38
39
40
41
42
43
44
45
46
47
48
49
50
51
52
53
27
26
25
28
24
23
22
21
58
20
29
19
57
18
30
17
16
31
32
15
33
34
14
13
12
11
35
10
9
8
56
36
7
37
6
5
2
4
3
1

EXPLODED DIAGRAM REF STATIC	FIXTURE	PART NUMBER	DESCRIPTION
1	COLORADO3QZL	PTJ21004542B	MPCB (BOM#1)
2	COLORADO3QZL	PTJ21000842	DMX CONNECTOR PCB(5PIN) (BOM#2)
3	COLORADO3QZL	PTJ33300141	USB-TYPEC SOCKET (BOM#3)
4	COLORADO3QZL	PTJ33300059	RUBBER FOR IP POWER IN/OUT SOCKET (BOM#4)
5	COLORADO3QZL	PTJ33300053	IP POWER IN/OUT SOCKET (BOM#5)
6	COLORADO3QZL	PTJ61108396E	REAR (BOM#6)
7	COLORADO3QZL	PTJ33200013A	FAN (BOM#7)
8	COLORADO3QZL	PTJ61010090A	FAN HOLDER (BOM#8)
9	COLORADO3QZL	PTJ61108397C	REAR PLATE (BOM#9)
10	COLORADO3QZL	PTJ32600824B	RUBBER FOR BOTTOM COVER (BOM#10)
11	COLORADO3QZL	PTJ61108392E	FAN PLATE (BOM#11)
12	COLORADO3QZL	PTJ33300097A	IP CONNECTOR (BOM#12)
13	COLORADO3QZL	PTJ33200292B	FAN (BOM#13)
14	COLORADO3QZL	PTJ61108398D	HEAT SINK (BOM#14)
15	COLORADO3QZL	PTJ33100382	MOTOR (BOM#15)
16	COLORADO3QZL	PTJ32100586B	STAND OFF (BOM#16)
17	COLORADO3QZL	PTJ31001288	ZOOM SLIDER WHEEL (BOM#17)
18	COLORADO3QZL	PTJ61108845F	SLIDER WHEEL HOLDER (BOM#18)
19	COLORADO3QZL	PTJ21004067C	LED PCB (BOM#19)
20	COLORADO3QZL	PTJ32301220A	LIGHT GUIDE (BOM#20)
21	COLORADO3QZL	PTJ32600881B	CUSHION RUBBER FOR HEAT SINK (BOM#21)
22	COLORADO3QZL	PTJ61108854F	LIGHT GUIDE PLATE (BOM#22)
23	COLORADO3QZL	PTJ61109462C	SHADOW SHIELD (BOM#23)
24	COLORADO3QZL	PTJ61109107C	EGG CRATE HOLDER (BOM#24)
25	COLORADO3QZL	PTJ62001165F	EGG CRATE PLAST COVER (BOM#25)
26	COLORADO3QZL	PTJ32202646D	FILTER (BOM#26)
27	COLORADO3QZL	PTJ32301254	LEN (BOM#27)
28	COLORADO3QZL	PTJ61103395	BELT PLATE (BOM#28)
29	COLORADO3QZL	PTJ32400043	ZOOM TIMING BELT (BOM#29)
30	COLORADO3QZL	PTJ31001314D	SLIDER BAR (BOM#30)
31	COLORADO3QZL	PTJ62001192	SLIDER BAR COVER (BOM#31)
32	COLORADO3QZL	PTJ31000105A	ZOOM TIMING BELT PULLEY (BOM#32)
33	COLORADO3QZL	PTJ61108843	MOTOR HOLDER (BOM#33)
34	COLORADO3QZL	PTJ61007824A	TOOTH LOCK PLATE (BOM#34)
35	COLORADO3QZL	PTJ32600823	RUBBER (BOM#35)
36	COLORADO3QZL	PTJ33000516C	PSU (BOM#36)
37	COLORADO3QZL	PTJ34100274	VALVE (BOM#37)
38	COLORADO3QZL	PTJ61101536A	GEL FRAME (BOM#38)
39	COLORADO3QZL	PTJ61108847A	LOCK (BOM#39)
40	COLORADO3QZL	PTJ32500045	SRING (BOM#40)
41	COLORADO3QZL	PTJ61108394C	LOCK HOLDER (BOM#41)
42	COLORADO3QZL	PTJ32600882E	CUSHION RUBBER FOR LENS (BOM#42)
43	COLORADO3QZL	PTJ32301307C	FRONT GLASS (BOM#43)
44	COLORADO3QZL	PTJ61108842B	GLASS PLATE without screws (BOM#44)
44	COLORADO3QZL	PTJ32000593	Screw For Glass Plate
45	COLORADO3QZL	PTJ61108849C	TOP COVER (BOM#45)
46	COLORADO3QZL	PTJ61103962	NYLON COVER (BOM#46)
47	COLORADO3QZL	PTJ32000415A	NYLON WASHER (BOM#47)
48	COLORADO3QZL	PTJ61106710	HANGING BRACKET KNOB (BOM#48)
49	COLORADO3QZL	PTJ62000569	PC RING A (BOM#49)
50	COLORADO3QZL	PTJ61108368D	HANGING BRACKET - IN (BOM#50)
51	COLORADO3QZL	PTJ61106103	CLAMP LOCK (BOM#51)
52	COLORADO3QZL	PTJ61108369H	HANGING BRACKET - OUT (BOM#52)
53	COLORADO3QZL	PTJ61110154A	OMEGA BRACKET (BOM#53)
54	COLORADO3QZL	PTJ32301308D	DISPLAY GLASS (BOM#54)
55	COLORADO3QZL	PTJ21004397	NFC SENSOR BOARD (BOM#55) Blue Board
56	COLORADO3QZL	PTJ34000338	THERMAL PAD (BOM#56)

57	COLORADO3QZL	PTJ32100585B	STAND OFF (BOM#57)
58	COLORADO3QZL	PTJ21001378A	HALL ELEMENT LOCATER A (BOM#58)
	COLORADO3QZL	PTJ14000992	TOP COVER and Front Glass Assembly